Prerequisite Courses Chart - MSE Polymer and Fiber Materials
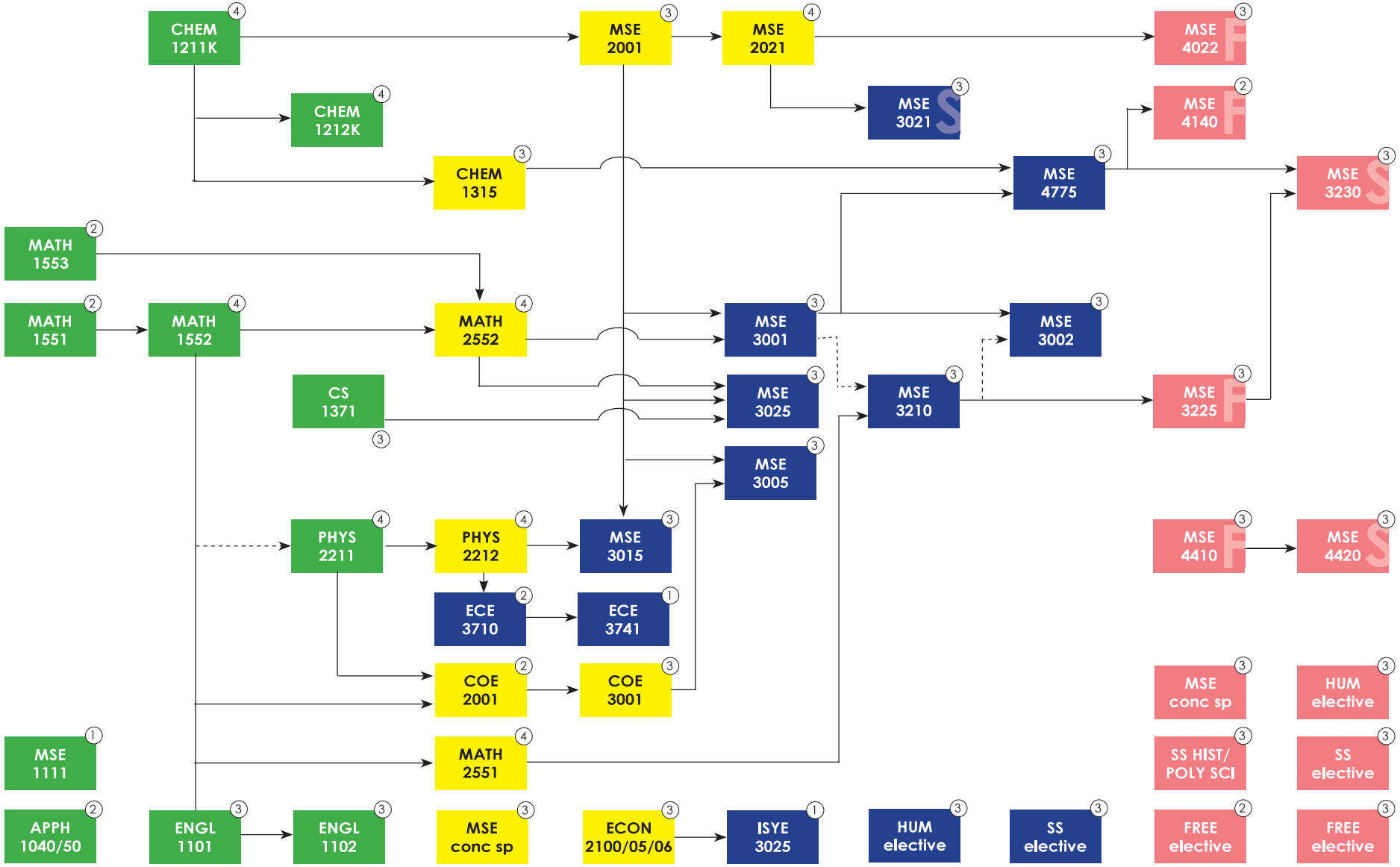
Recommended Year of Study: 1st yr | 2nd yr | 3rd yr | 4th yr | → Prerequisite | --→ Pre-corequisite | F Fall Only | S Spring Only